DP notation qualifiers for closed bus-ties

DNV-RP-0591 Redundant Dynamic Positioning systems with closed bus-ties

Aleks Karlsen

10 October 2023

Content

- DP industry assurance challenges
- Closed bus-ties basic, discrimination and fault ride through concepts
- Black-out incident examples
- IMO requirements
- CB power system requirements development
- RP-0591, and the basics of the new CB qualifiers
- Adding closed-bus qualifiers, DP-2 example
- Application of CB qualifiers, and challenges when doing so on an existing vessel
- Basic description of the CB qualifiers requirements in relation to DP-2 and DP-3 systems
- Battery spaces
- Conclusions

Balancing well known dilemmas and trade-offs

- **Cost**, optimisation, design margins
- **De-carbonisation / GHGER**
- **Integration** – ‘everything is connected’
- New **technology**
- …

- Safety & **safety margins**
- **Spinning reserve** and running machinery
- **Independency, segregation**, safety barriers
- Well **proven technology**
- …

→ **Most of these trade-off’s typically result in:**

- increased **complexity** and **higher level of integration**
- increased control system & **software dependency**
- **Higher demand for operational awareness** (Including: Management of Change, What mode to use in the different vessel operations, DP assurance activities)

Selectivity / discrimination / ride through (main principles)

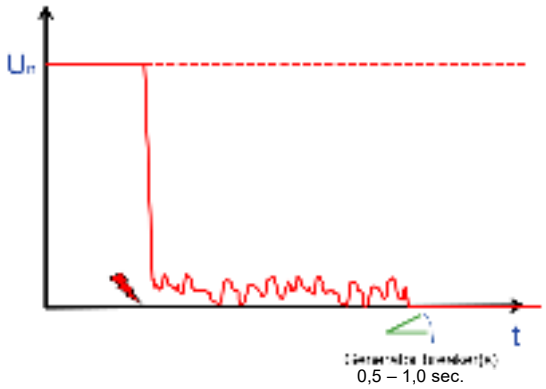

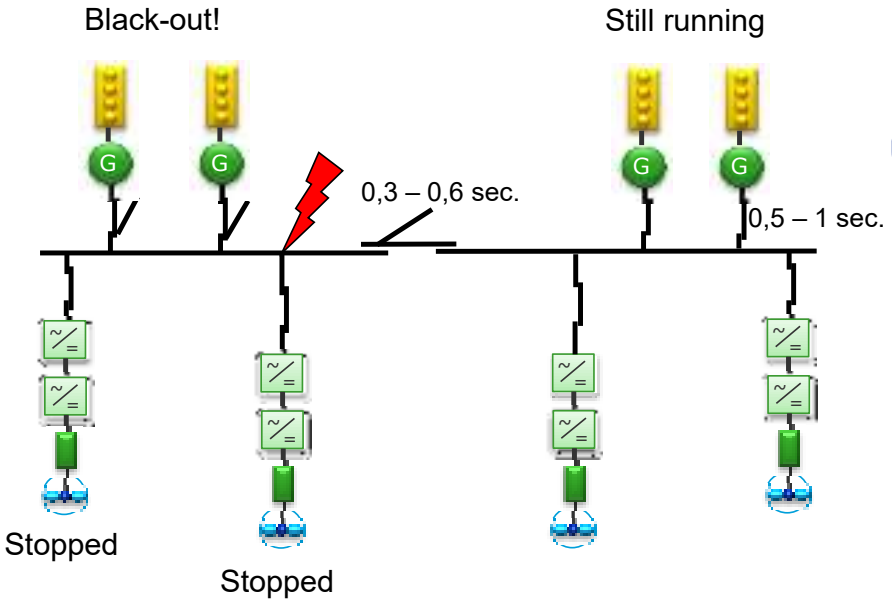

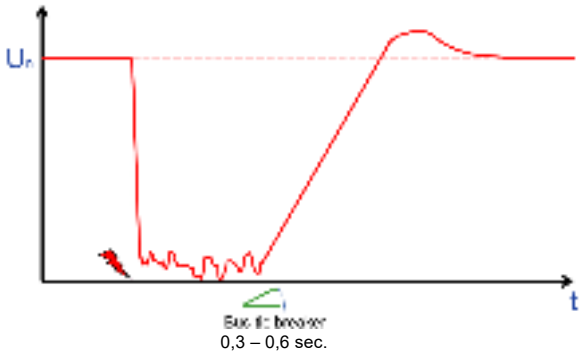

Bus-bar breaker provides discrimination between the two redundancy groups.
Ride through capabilities must also be verified!

What IMO DP guidelines says about DP power systems

IMO MSC.1/Circ. 1580 "Guidelines for vessels and units with dynamic positioning (DP) systems"

"**For equipment class 2**, the power system should be divisible into two or more systems so that, in the event of failure of one sub-system, at least one other system will remain in operation and provide sufficient power for station keeping. **The power system(s) may be run as one system during operation, but should be arranged by bus-tie breaker(s) to separate the systems automatically upon failures which could be transferred from one system to another,** including, but **not limited to, overloading and short circuits**."

"**For equipment class 3**, the power system should be divisible into two or more systems so that, in the event of failure of one system, at least one other system will remain in operation and provide sufficient power for station keeping. The divided power system should be located in different spaces separated by A-60 class divisions. Where the power systems are located below the operational waterline, the separation should also be watertight. **Bus-tie breakers should be open during equipment class 3 operations unless equivalent integrity of power operation can be accepted** according to paragraph 3.1.4."

(The text in IMO MSC/Circ. 645 is almost identical.)

Technology and assurance advancements vs rule development:

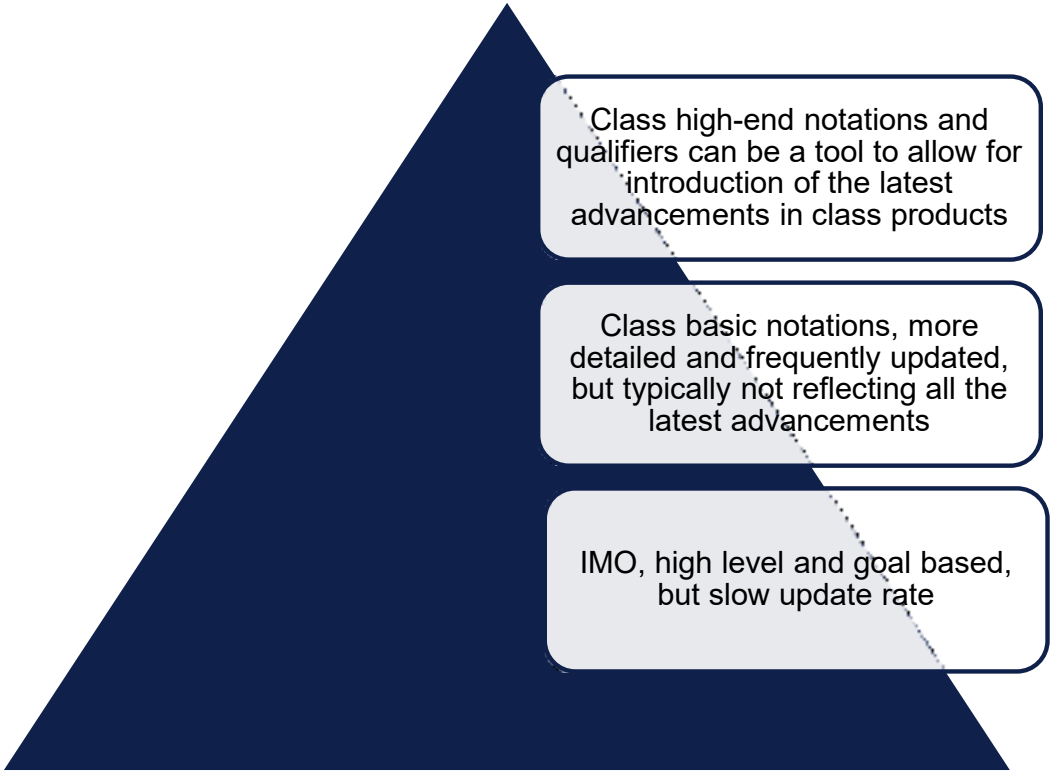

→ DNV DYNPOS(AUTR-CBT)

→ DNV DYNPOS(AUTR)

→ IMO DP equipment class 2
DNV DPS(2)

Two quite recent DP-3 drilling unit incidents

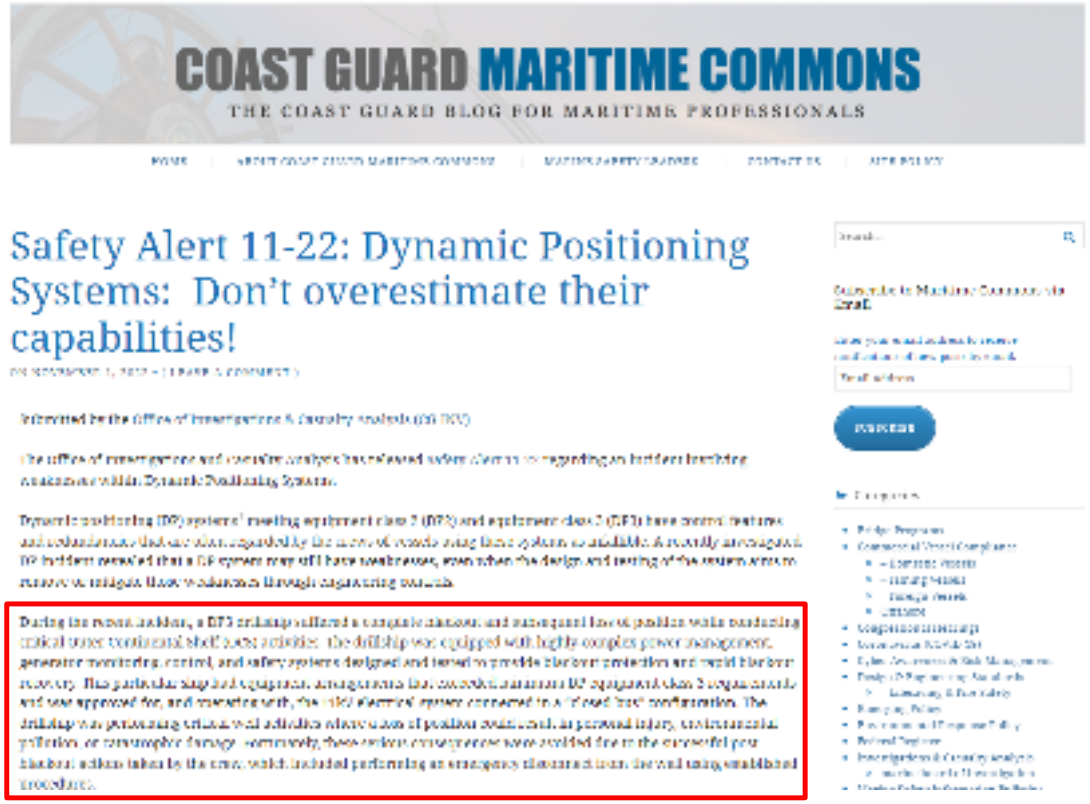

COAST GUARD MARITIME COMMONS

THE COAST GUARD BLOG FOR MARITIME PROFESSIONALS

Safety Alert 11-22: Dynamic Positioning Systems: Don't overestimate their capabilities!

Submitted by the Office of Investigations & Casualty Analysis (CG-INV)

The office of investigations and casualty analysis has released safety alert to regarding an incident involving weaknesses within Dynamic Positioning Systems.

Dynamic positioning (DP) systems[1] meeting equipment class 2 (DP2) and equipment class 3 (DP3) have control features and redundancies that are often regarded by the crews of vessels using these systems as infallible. A recently investigated DP incident revealed that a DP system may still have weaknesses, even when the design and testing of the system aims to remove or mitigate these weaknesses through engineering controls.

During the recent incident, a DP3 drillship suffered a complete blackout and subsequent loss of position while conducting critical water continental shelf [illegible] activities. The drillship was equipped with highly complex power management, generator monitoring, control, and safety systems designed and tested to provide blackout protection and rapid blackout recovery. This particular ship had equipment arrangements that exceeded minimum DP equipment class 3 requirements and was approved for, and operating with, the [illegible] electrical system connected to a "closed bus" configuration. The drillship was performing critical well activities where a loss of position could result in personal injury, environmental pollution, or catastrophic damage. Fortunately, these various consequences were avoided due to the successful post blackout actions taken by the crew, which included performing an emergency disconnect from the well using established procedures.

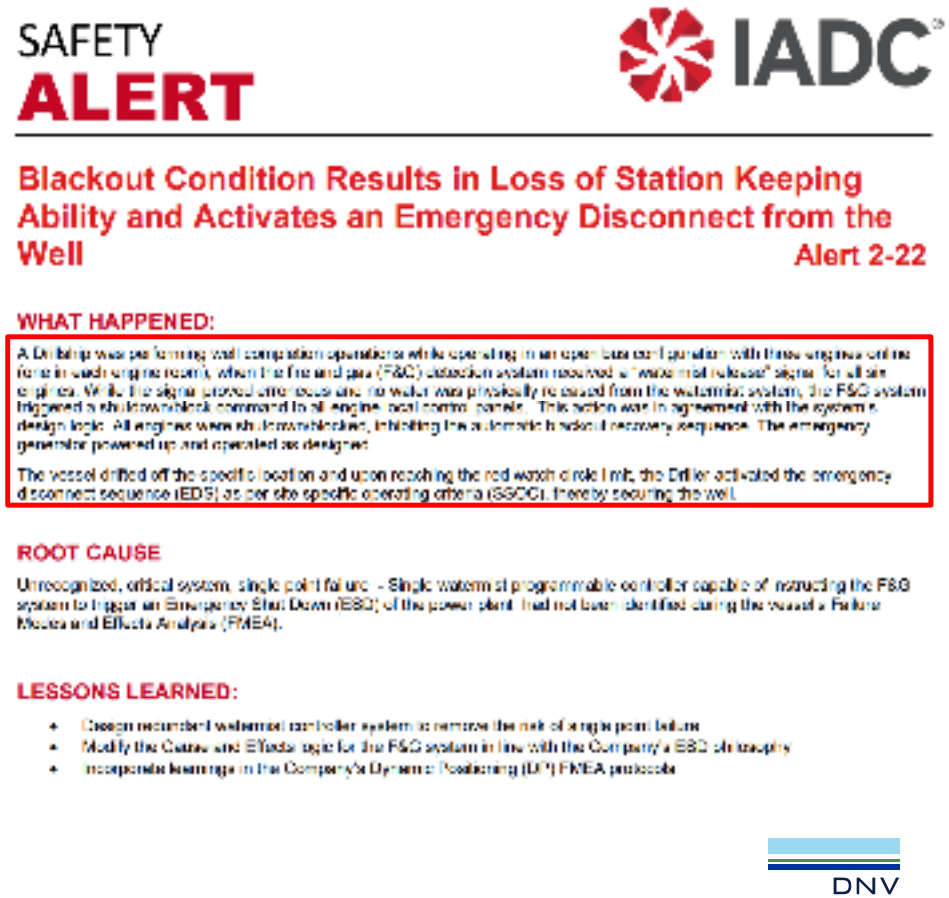

SAFETY ALERT

IADC

Blackout Condition Results in Loss of Station Keeping Ability and Activates an Emergency Disconnect from the Well

Alert 2-22

WHAT HAPPENED:

A Drillship was performing well completion operations while operating in an open bus configuration with three engines online (one in each engine room), when the fire and gas (F&G) detection system received a "watermist release" signal for all six engines. While the signal proved erroneous and no water was physically released from the watermist system, the F&G system triggered a shutdown/block command to all engine local control panels. This action was in agreement with the system's design logic. All engines were shutdown/blocked, inhibiting the automatic blackout recovery sequence. The emergency generator powered up and operated as designed.

The vessel drifted off the specific location and upon reaching the red watch circle limit, the Driller activated the emergency disconnect sequence (EDS) as per site specific operating criteria (SSOC), thereby securing the well.

ROOT CAUSE

Unrecognized, critical system, single point failure - Single watermist programmable controller capable of instructing the F&G system to trigger an Emergency Shut Down (ESD) of the power plant had not been identified during the vessel's Failure Modes and Effects Analysis (FMEA).

LESSONS LEARNED:

- Design redundant watermist controller system to remove the risk of single point failure
- Modify the Cause and Effects logic for the F&G system in line with the Company's ESD philosophy
- Incorporate learnings in the Company's Dynamic Positioning (DP) FMEA protocols

DNV

Closed bus power system integrity

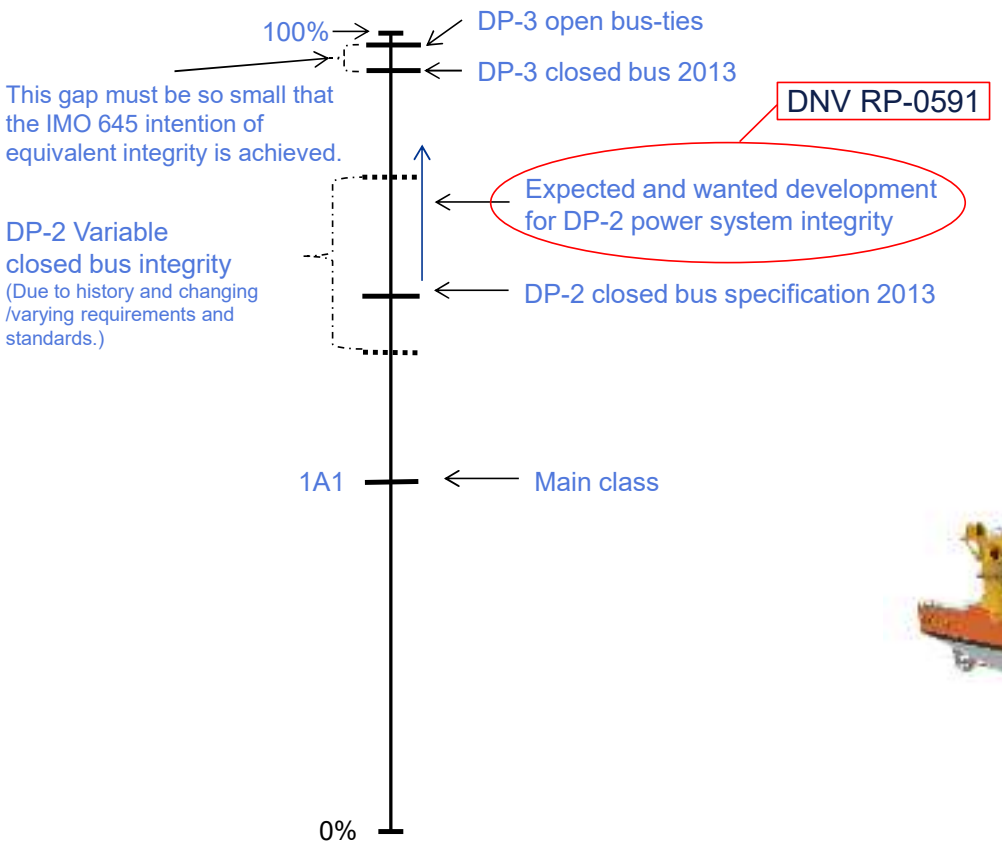

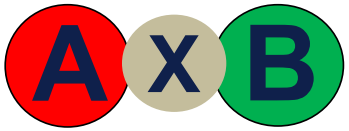

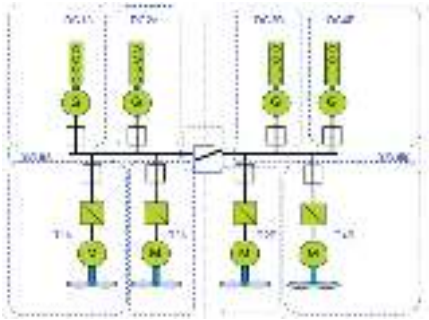

(Illustrations are not scaled)

DNV

DNV-RP-0591

Redundant dynamic positioning systems with closed bus-ties

Background

- This new recommended practice **replaces DNV offshore technical guidance OTG-10** *DP-classed vessels with closed bus-ties*.
- The new RP **covers a wider scope of closed bus-ties system arrangements**, and incorporates **technical developments and learnings** made since last revision.

Scope

- Reflect changes in classification rules, including introduction of closed bus-tie qualifiers **CB**, **CBS** and **CBT** for a wider range of redundant **DP** class notations.
- Include **guidance on DC power** systems.
- Include **guidance on battery hybrid** DP systems.
- General updates based on **technology development and new learnings** made since last revision (i.e., the OTG-10).

Consequence

- **Better and current guidelines covering a wider scope of system arrangements, suitable for fuel efficient and robust closed bus-ties DP systems.**
- **The document can also be used for systems other than DP when a robust and fuel-efficient closed bus-ties power system is wanted.**

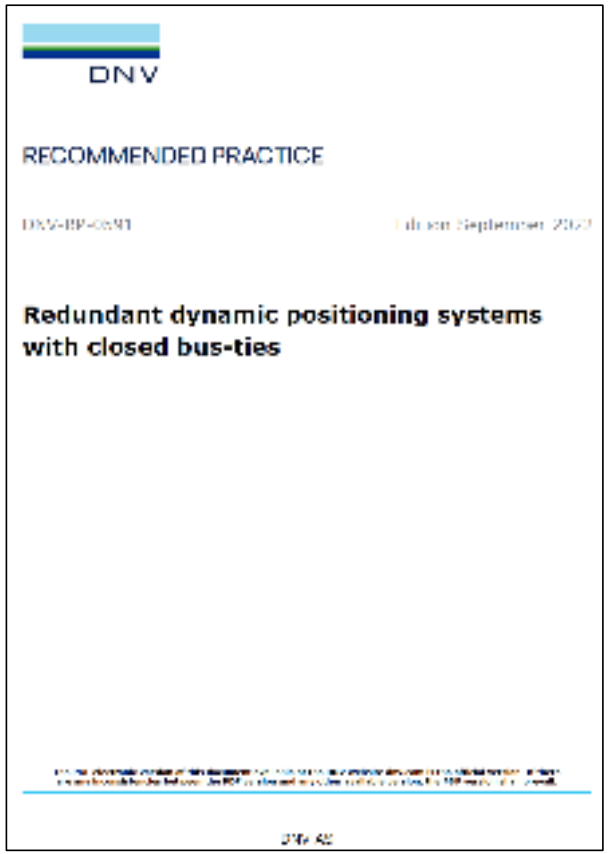

DNV

The 3 qualifiers

Qualifier	*Indicating that there are:*
CB	Additional equipment and functions required to provide increased closed bus-ties robustness
CBS	In addition to the **CB** requirements, verification by specified built in test simulation equipment is required
CBT	In addition to the **CB** requirements, live short circuit and ground fault testing is required

The approach is based on the single failure integrity principle, and the DP systems integrity will be dependent on automatic on-demand functions!

Based on the understood integrity requirements in IMO DP guidelines, the technical requirements, method, and frequency of verification activities following the qualifiers differ between the DP notations.

Hence, the requirement are typically stricter for DP-3 notations compared to DP-2 notations. E.g., DP-3 requires independent primary and secondary protection function to comply with the IMO "equivalent to open bus-ties" requirement, while DP-2 requires only a single automatic function.

There must be an order.

https://www.aftenposten.no/meninger/i/A2MWx/michelin-schmichelin

Adding closed-bus Qualifiers to a notation, DP-2 example

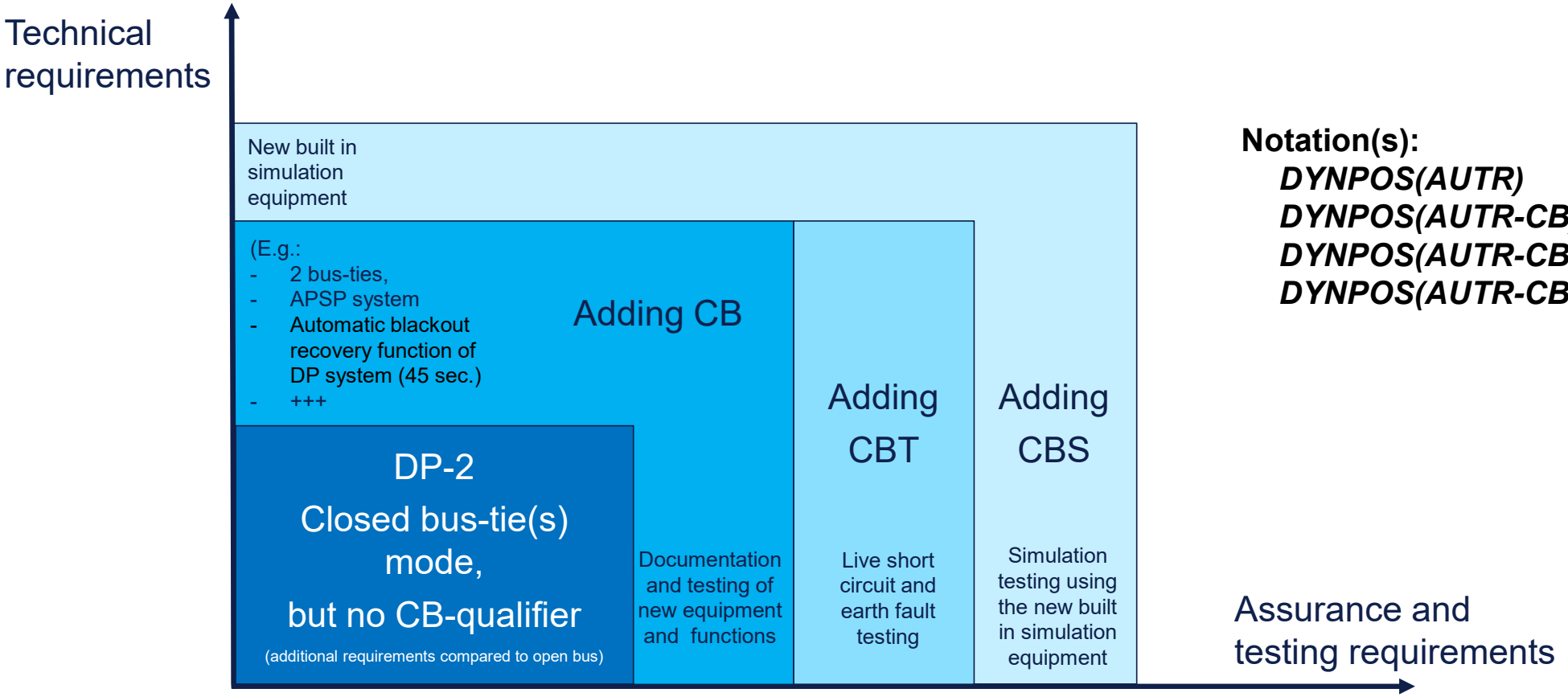

Notation(s):

DYNPOS(AUTR)
DYNPOS(AUTR-CB)
DYNPOS(AUTR-CBT)
DYNPOS(AUTR-CBS)

(Illustrations are not scaled)

Application of CB qualifiers

- **Especially for upgrading of existing vessels some of the requirements may be challenging/resource demanding** to implement, e.g., due to:
  - **new equipment needs to be fitted** and there may be lack of space, e.g., in existing switchboards or switchboard rooms
  - the **original installed technology may not be** suitable for the additional test requirements
  - the **original installed equipment may not be suitable or sufficient for adding the additional functional requirements**
- The **operational impact (over the vessel operational life)** should also be considered :
  - **maintenance and surveys**,
  - **testing,** and
  - **Management Of Change** requirements (MOC)
- Due to this **it is recommended that a feasibility study is carried out**

Example of some potential challenges for applying qualifiers on existing vessels

- **CB qualifier:**
  - requirement for **two bus-tie breakers** between redundancy groups for **DP-2 notations**
  - The requirement for an **APSP system**
  - The requirement for an **independent alternative protection function** for all relevant failure modes for **DP-3 notations**
  - Bus-tie discrimination upon **arcing faults and other relevant failure modes in the overload range**
  - The requirement for **automatic blackout recovery function of DP system** (45 sec.)
- **CBS qualifier:**
  - This is currently **not available "of the shelf" equipment**
  - The requirement for an **initial live short circuit** and earth fault test for DP-3 notations
- **CBT qualifier:**
  - The requirement for **live short circuit and earth fault testing at initial and 5-yearly retention surveys**
  - The **exiting power system (e.g., a LV AC systems) may not be well suited**

DNV

DYNPOS(AUTR), DPS(2) qualifier descriptions

Qualifier	Description
	Even if no closed bus-tie(s) qualifier is assigned, **the vessel may have closed bus-tie(s) mode(s) approved based on the minimum requirements in the DP class rules applicable for the vessel**. Any potential closed bus-tie(s) modes shall be described and documented in the required DP FMEA and supporting documentation
CB	The vessel has **approved DP mode(s) based on closed bus-ties**. The qualifier will require, in addition to notations without qualifier: • **additional functionality and equipment** • **additional testing and inspections** **Live short circuit and earth fault testing and simulation test capabilities are not required.**
CBS	The qualifier will require, **in addition to qualifier CB**: • **simulation test capabilities (Note that this is currently not available "of the shelf equipment".)** **Live short circuit and earth fault testing is not required.**
CBT	The qualifier will require, **in addition to qualifier CB**: • **live short circuit and earth fault testing required**. Required both at the **initial testing** for issuance of the qualifier, and for **retention surveys** (5-yearly).

DYNPOS(AUTRO), DPS(3) qualifier descriptions

Qualifier	Description
	If no closed bus-tie(s) qualifier is assigned, **the vessel does not have any approved DP** mode based on closed bus-ties.
CB	The **vessel has approved DP mode(s)** based on closed bus-ties. The system integrity shall be documented in the required DP FMEA and supporting documentation. The qualifier will require: • **additional functionality and equipment (including duplicated independent primary and secondary protective functions)** • **computer simulations (power system modelling)** • **additional testing and inspections** **Live short circuit and earth fault testing and simulation test capabilities are not required.**
CBS	The qualifier will require, **in addition to qualifier CB**: • **built in simulation test capabilities (simultaneous currents and voltages injection on a system level)** ***(Note that this is currently not available "of the shelf equipment".)*** • **live short circuit and earth fault testing at the initial testing** for issuance of the qualifier Live short circuit and earth fault testing will not be required for retention survey.
CBT	The qualifier will require, **in addition to qualifier CB**: • **live short circuit and earth fault testing required**. Required both at the **initial testing** for issuance of the qualifier, and for **5-yearly retention survey** (5-yearly).

Battery spaces

- **Thermal runaway with subsequent off-gassing shall be considered as a relevant failure mode**
- **Battery systems belonging to different redundancy groups cannot be located in a common compartment when a thermal runaway with subsequent off-gassing from one battery system will affect battery systems belonging to other redundancy groups**.
- **Failure modes potentially exceeding the propagation test scenario relevant for the batteries e.g., an internal short circuit within the battery system, shall be considered.**

The following is typically required:

- **battery systems belonging to different redundancy groups shall be arranged in separate gastight spaces**.
- there shall be gas detection with an alarm for each gastight battery space (automatic disconnection of the battery will typically also be required)
- single failure in the gas detection systems shall not cause disconnection of batteries belonging to more than one redundancy group.

Conclusions

- The new **DNV-RP-0591** ***Redundant dynamic positioning systems with closed bus-ties*** provides **more flexibility** and covers a **wider range of DP systems arrangements**
- The approach in the RP build the **single failure principle**
- **Especially for upgrading of existing vessels some of the requirements may be challenging/resource demanding** to implement and it is **it is recommended that a feasibility study is carried out** before an upgrade is commenced.
- By utilizing **modern technology and assurance techniques,** combined with **necessary procedures, competence and training, high integrity redundant DP systems can be based on, and include closed bus-ties modes, which are suitable for robust and fuel-efficient closed bus-ties operation.**
- **New revision coming soon,** will include an appendix on the DNV expectations for a DP philosophy document.

Thank you for your attention

I will be happy to take your questions.

Aleks Karlsen
Aleks.Karlsen@dnv.com

www.dnv.com