DYNAMIC POSITIONING CONFERENCE
October 09 - 10, 2018

REGULATORY SESSION

MTS Guidelines and Class Rules. How to bridge the gaps?

By Joey Fisher (IEng IMarEng MIMarEST, AVI) and
Alex Brabin (CEng CMarEng MIMarEST, AVI)

M3 Marine Expertise Pte Ltd

Abstract

Guidance documents on DP, Design and Operations, were published by the MTS DP Technical Committee in 2011 and 2010, subsequent engagement has occurred with:

- Classification Societies (DNV, ABS).
- United States Coast Guard (USCG).
- Marine Safety Forum (MSF).

It became apparent that a mechanism needed to be developed and implemented to address the following in a pragmatic manner.

- Feedback provided by the various stakeholders. Additional information and guidance that the MTS DP Technical Committee wished to provide.
- Means to facilitate revisions to the documents and communication of the same to the various stakeholders.

The use of Technical and Operations Guidance Notes (TECHOP) was deemed to be a suitable vehicle to address the above.

TECHOPs are published as relevant and appropriate. These TECHOPs are written in a manner that facilitates them to be used as standalone documents.

The TECHOPs are intended to supplement the information provided in all parts of the MTS DP Vessel Design Philosophy Guidelines.

Each TECHOP includes a 'case for action', which, in the case of those applicable to design (D), provide real life examples of DP incidents which necessitate the guidance.

However, often there are challenges with implementation of the guidance on existing vessels and even on new build vessels, due to various factors including the requirements of the main class rules.

This paper will explore those challenges, provide examples of solutions and provide suggestions on how improvements can be made to avoid problems during pre-hire acceptance of DP vessels where those vessels are assessed against the MTS DP guidelines.

Abbreviation / Definition

AC	Alternating current
DC	Direct Current
DG	Diesel Generator
DP	Dynamic Positioning
DPS	Dynamic Positioning System
DPO	Dynamic Positioning Operator
DSV	Diving Support Vessel
FMEA	Failure Modes and Effects Analysis
IMO	International Maritime Organisation
MEN	Multiple Earthed Neutral
MSB	Main Switchboard
MSC	Maritime Safety Committee
MTS	Marine Technology Society
OCIMF	Oil Companies International Marine Forum
ODP	Operations, Design, People
OSV	Offshore Support Vessel
PSV	Platform Supply Vessel
RG	Redundant Group
ROV	Remote Operated Vehicle
SME	Subject Matter Expert
SOLAS	Safety of Lives at Sea
TECHOP	Technical and Operations Guidance Notes
TN-S	Terra Neutral – Separate
UPS	Uninterruptable Power Supply
V	Voltage
WCFDI	Worst Case Failure Design Intent

Introduction

M3 Marine Expertise is based in Singapore and was established in 2010. The company considers that the information shared in this paper could benefit the DP community, through the realisation that there are gaps in processes that allow the delivery of predictable outcomes and incident free DP operations. Such gaps are presented as samples of representative 'challenges' that have been experienced during the DP FMEA processes for DP Class 2 and DP Class 3 vessels. These challenges are related to competency and the independence and segregation of redundant systems.

Example of a basic misinterpretation of DP class rules, by class

In December 2012, one of the classification societies introduced their Guide for Dynamic Positioning Systems. This was a significant step forward in terms of safety for vessels with DP systems that were constructed in accordance with those class rules, after this date. The main class rules that made reference to dynamic positioning systems and the 'DPS' notations specified compliance with requirements for safety and redundancy, as required by their Guide for Dynamic Positioning Systems.

The guide had a significant impact on OSV vessel designs; in particular for those built in Asia with technical system configurations that consisted of two main engines driving propulsion thrusters and shaft generators with two bow tunnel thrusters and one stern tunnel thruster.

A typical arrangement is shown in Figure 1.

Figure 1

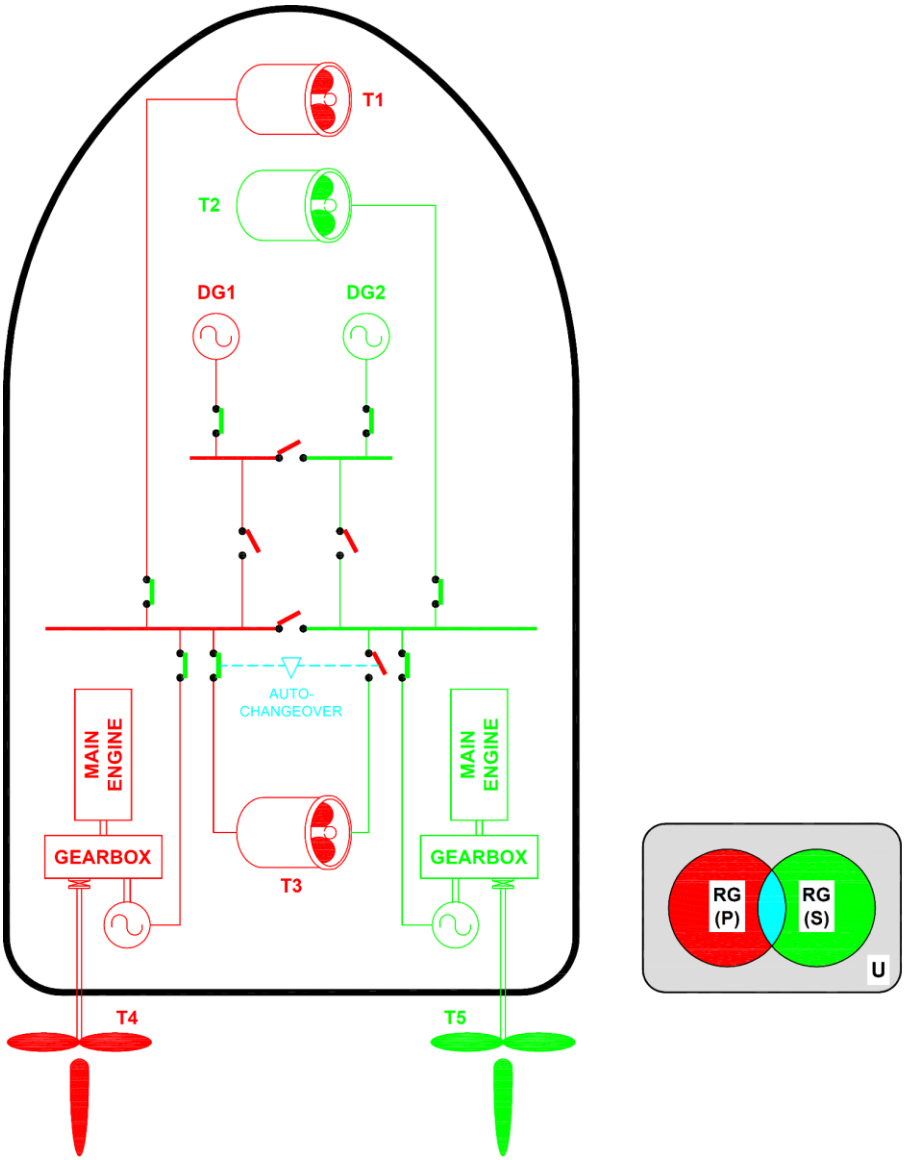

With this arrangement, there is full reliance on the successful power supply automatic changeover, start up and reselection of the single stern thruster back into DP control, for the vessel to maintain position following loss of one redundant group.

For vessels with this arrangement, for which there are many, most DP control systems consider the single stern thruster as always available following a failure, for the purpose of the consequence analysis function. This and the adequacy of such designs are not addressed in this paper.

The potential for fault propagation between redundant systems and defeating the redundancy concept that is introduced by such designs, is also not considered here.

The classification society's 'Guide for Dynamic Positioning Systems' that was published in December 2012, included the following statements in Section 2; Dynamic Positioning System Design – Redundancy Design;

- Redundancy is to be based on systems which are immediately available for use, namely on running machinery. In general, full stop and restart of the system do not comply.
- Independence of redundancy groups is to take into account all technical functions.
- The redundancy design is to provide suitable combinations of available systems following any defined fault.

It became apparent to the designers of DP OSVs in Asia that the arrangement described above, with a technical system configuration that included a single stern tunnel thruster with a reliance upon an automatic change-over to maintain position following loss of one redundant group, was not compliant with the new guide.

These designs were changed so that the single stern tunnel thruster was allocated to a separate redundant group. This redundant group consisted of two diesel generators, one main switchboard bus section and the single stern tunnel thruster, as shown in Figure 2.

Figure 2

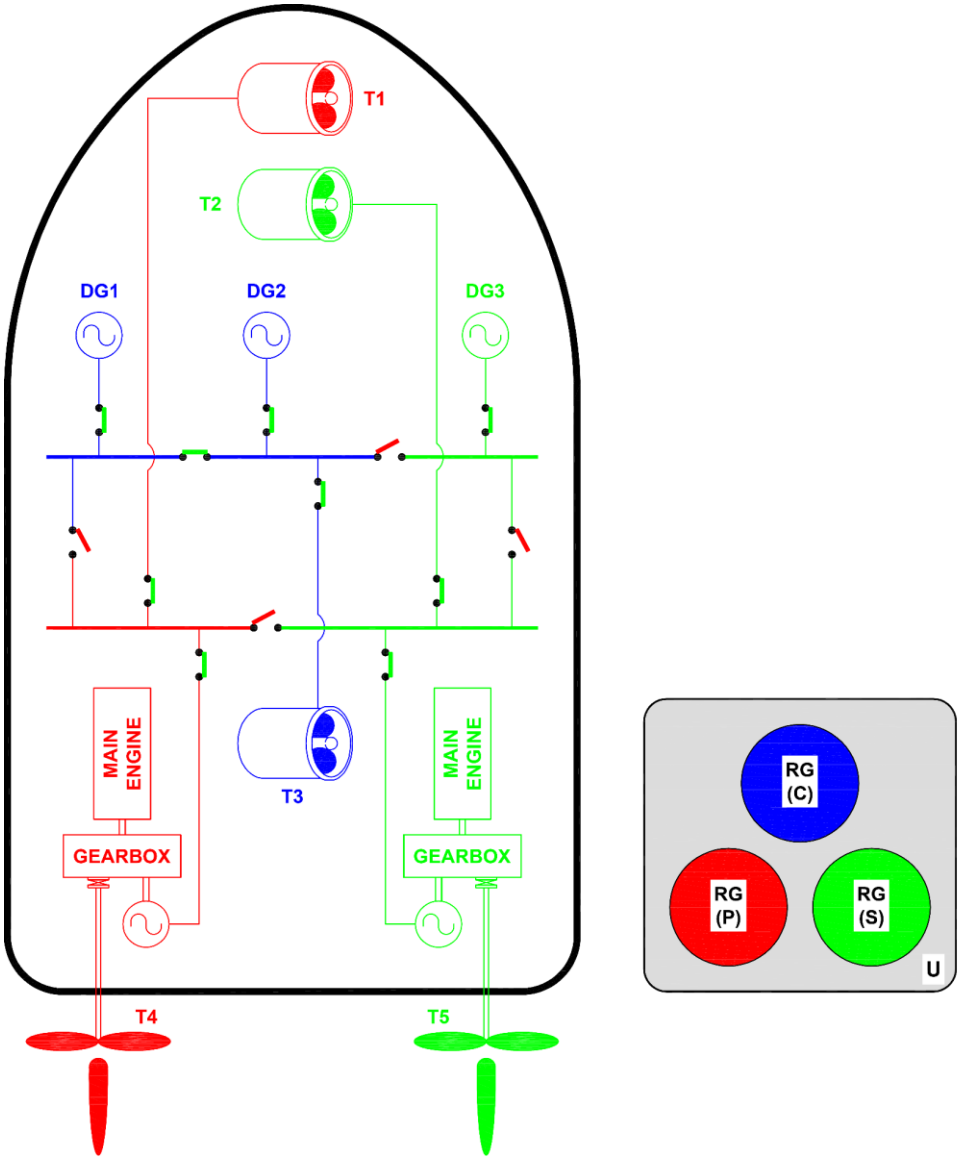
T1
T2
DG1
DG2
DG3
MAIN ENGINE
T3
MAIN ENGINE
GEARBOX
GEARBOX
T4
T5
RG (C)
RG (P)
RG (S)
U

This meant that in the case of loss of the Port Redundant Group or Starboard Redundant Group, the single stern tunnel thruster would remain available to provide thrust in the sway axis and provided that the vessel was operated within its environmental envelope, the vessel's position should be maintained.

Unfortunately, most of these designs did not consider that the division of all systems should be maintained throughout the design.

The FMEA service provider pointed out two flaws in the design following preliminary review of the piping system drawings for the auxiliary systems.

- The main engine belonging to the Port Redundant Group and the Diesel Generators belonging to the Centre Redundant Group shared the same fuel oil service tank.
- The main engine belonging to the Port Redundant Group and the Diesel Generators belonging to Centre Redundant Group were arranged for direct sea water cooling from one designated sea chest.

The vessel designer and builder argued that these arrangements were in compliance with the applicable rule requirements, despite the first statement in the guide under 'Auxiliary Systems' – 'Fuel Oil', being as follows;

The engine fuel supply system is to follow the overall split concept with required redundancy, including redundancy of service tanks, supply and return lines, filters, pumps, quick closing valves and their controls.

The guide also states that arrangements for cooling water should follow the redundancy concept.

A debate ensued where the designers explained the redundancy concept / arrangements and where the DP FMEA provider explained their understanding of the redundancy concept and quoted the relevant rules and guidelines. This included the FMEA provider pointing out that there were various references to the DP Vessel Design Philosophy Guidelines by MTS within the guide, including the requirements for the DP FMEA. One of those applicable references was from section 9 of the DP Vessel Design Philosophy Guidelines which lists one of the attributes of a robust redundancy concept as: The division of systems into redundant groups is maintained throughout the design. The DP FMEA provider had the same understanding from the statements contained within the classification society's guide, which was the applicable rule reference.

The designer and builder subsequently provided a copy of an email to the DP FMEA provider. The email was from the classification society's technical office responsible for drawing / document approvals. The email stated as follows;

With reference to your following query on the above subject, we advise that it is not required by [Classification Society] to consider the loss of fuel oil day tank due to fuel oil contamination for the subject vessel.

A statement followed referring to the requirements for a separate fuel oil service tank for each generator, under a DP enhanced notation, which the vessel did not have. This statement was therefore not relevant.

The view of the designer and builder was that this formal email advice allowed the engines in two of the three redundant groups to be supplied with fuel from a single source / single fuel oil service tank and that the DP FMEA could omit contamination of fuel oil in a single service tank as a valid failure mode.

The DP FMEA provider sought further clarifications directly from the classification society and the design of the systems was subsequently modified so that they were in accordance with the redundancy concept. This not only included the fuel oil and cooling systems but many other arrangements where auxiliary systems for two of the three redundant groups were shared, including the engine / shaft generator control power arrangements, the switchboard control power arrangements and the arrangements of group emergency stop systems.

The buyer of the vessel did not have any strong DP expertise within their organisation and relied upon the advice from the DP FMEA provider.

The DP FMEA provider has experienced many similar cases and most cases are more complex involving electrical and control systems.

Examples of Challenges with Implementation of Guidelines

During the FMEA processes for DP vessels, M3 Marine Expertise has been faced with many challenges when attempting to implement the MTS DP Design Philosophy Guidelines and in particular, the independence and segregation of redundant power systems. The challenges have often been due to classification society rules that are not related to DP systems. Some examples of these challenges are presented in this paper.

Example 1 – Cross connections necessitated by SOLAS and class rules

Overview

The vessel is a DP Class 3 Multipurpose Offshore Construction and Diving Support Vessel that was under construction in China. The vessel has six diesel generators and six thrusters. It has an 'Enhanced Reliability' class notation and is designed to operate in DP modes with open or closed bus ties.

Description

During the initial phase of the project, the DP FMEA service provider was asked to produce an Electrical System Philosophy document based on the preliminary drawings for the electrical power / distribution system. The classification society required the Electrical System Philosophy in accordance with the main class rules (rules for ships) and the specific requirement was for the document to include a description of all operating modes in order to provide an understanding of the modes of operation that are relevant for the power system.

The FMEA service provider saw this as an ideal opportunity to ensure that the design of the electrical power distribution systems were in accordance with the MTS DP guidelines and in particular, two Design TECHOP papers that had been recently published at that time, namely;

- TECHOP_ODP_11_(D)_Cross Connections
- TECHOP_ODP_13_(D)_Control Power Supplies and Auto Changeovers

The 'Enhanced Reliability' notation requires that each diesel generator has autonomous control power. For the diesel generator engines, this was arranged with individual UPS units that had a dual power supply from separate 440V switchboards within the same redundant group as the respective diesel generators.

An additional power supply was arranged to the UPSs for the diesel generators in one engine room to comply with the requirements for dead ship recovery; SOLAS Ch.II-1 41.1.4. This was arranged to the UPSs for the diesel generators that belonged to the same redundant group as the emergency switchboard. Each UPS had had an automatic change-over to the emergency supply.

The arrangement is shown in Figure 3.

Figure 3

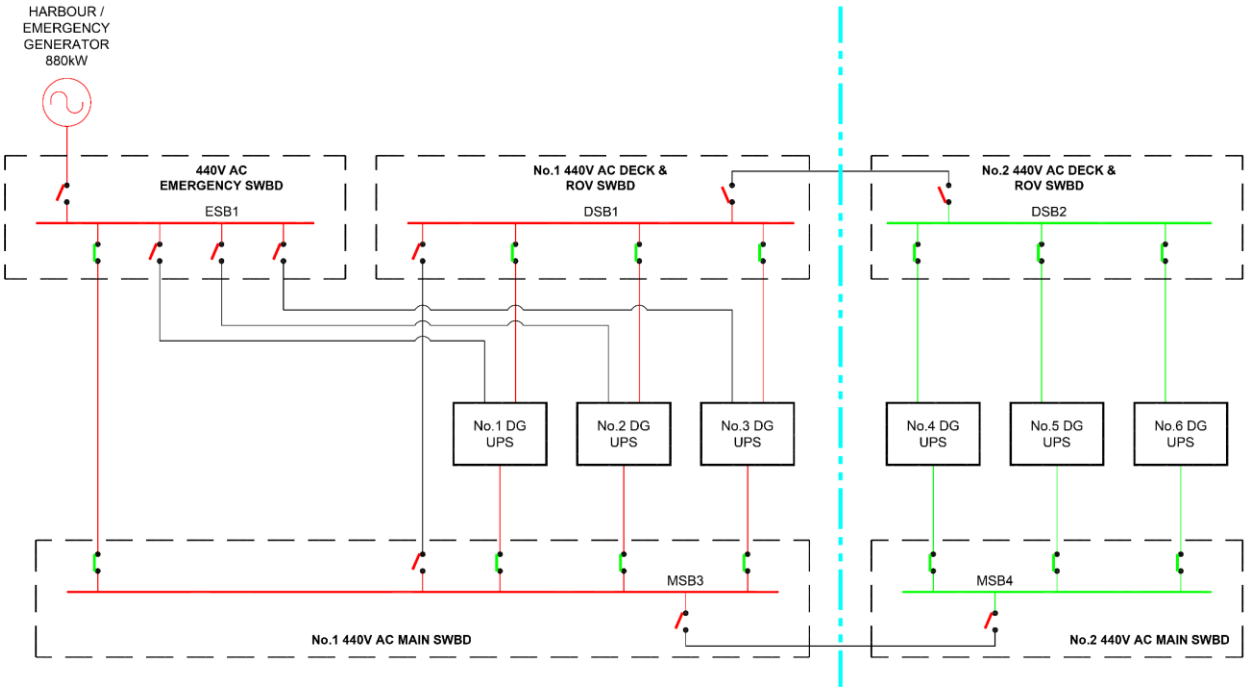

The classification society approved the Electrical System Philosophy document with one comment;

At least two generators (one on each switchboard) need to be arranged for start from dead ship (rule reference).

Dead ship is defined in the classification societies' Rules for Classification of Ships as follows (see also SOLAS Ch.II-1 41.1.4).

Dead ship – Dead ship condition is the condition under which the entire machinery installation is not in operation. All batteries and / or pressure vessels are considered depleted. Emergency generation is considered available.

The applicable class rules that were referenced were as follows;

- Interpretation of SOLAS Ch.II-1/41.5.1.1

  In addition, the generating sets shall be such as to ensure that with any one generator, transformer or power converter out of service, the remaining generating sets, transformers and power converters shall be capable of providing the electrical services necessary to start the main propulsion plant from a dead ship condition.
- The emergency source of electrical power may be used for the purpose of starting from a dead ship condition if its capability either alone or combined with that of any other source of electrical power is sufficient to provide at the same time those services required to be supplied by C103, except fire pumps and steering gear, if any.

Guidance note:

On installations without a dedicated emergency generator in accordance with C104, only one engine room is considered to be in dead ship conditions, since there should be redundancy in starting arrangement for each engine room as required for emergency generator sets. However, necessary energy for auxiliaries needed for start (fuel, lubrication oil priming, etc.) must have the same arrangement as the source for starting energy.

For vessels with two or more independent engine rooms but not complying with C104, the requirements for dead ship starting still applies, i.e. dead ship condition in both/all engine rooms simultaneously.

The referenced rule requirement (C104) was applicable only for vessels without an emergency generator which met other specific rule requirements allowing compliance with this arrangement.

The arrangement that complied with the main class rules for the vessel and which was implemented as the basis for the design, is shown in Figure 4.

Figure 4

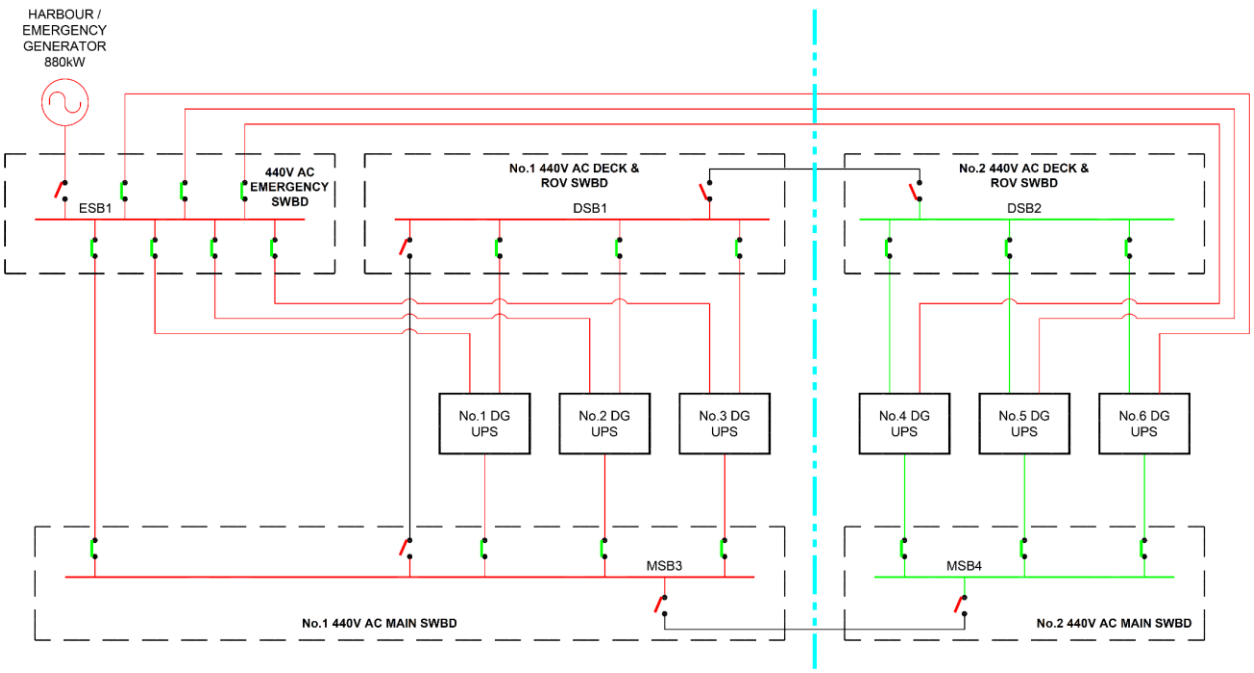

TECHOP_ODP_13_(D)_Control Power Supplies and Auto Changeovers describes a very similar arrangement and explains how a common point is created in the redundancy concept by bringing feeders for consumers in each redundant group to the emergency switchboard. It also explains how a configuration error, followed by a failure, could result in faults that affect both redundant systems.

The TECHOP also explains what analysis is necessary to mitigate such problems that this arrangement may introduce. However, designers, shipyards and equipment manufacturers are reluctant to support or invest in such analysis with documentation that studies and verifies the effects of such failures, or provide detailed information that would allow others to do this.

Therefore, more often than not, when such arrangements exist, barriers are implemented by isolating the power supplies that originate from another redundant group. If Fault Tolerance, Fault Resistance and Fault Ride Through cannot be proven, there has to be Segregation, Independence and Autonomy.

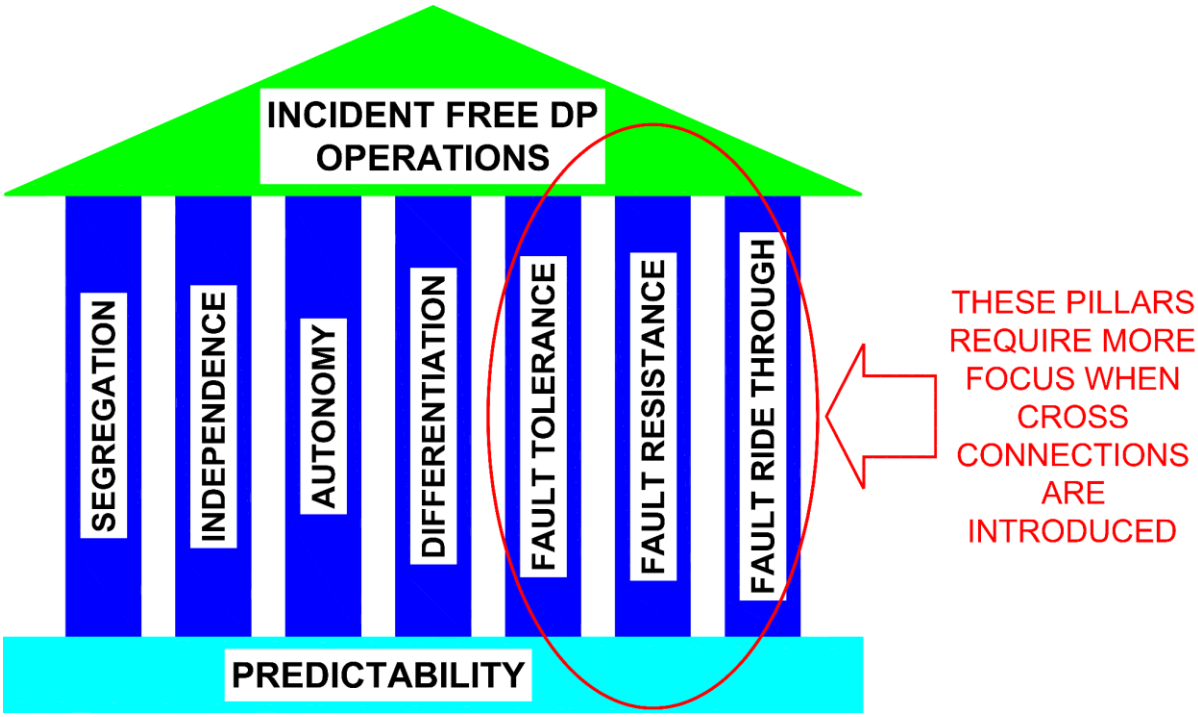

This is what was implemented in this case and by specifying the isolations in the FMEA documentation, this will be carried through to the vessel's CAM set up for DP operations. The arrangement is shown in Figure 5.

Figure 5

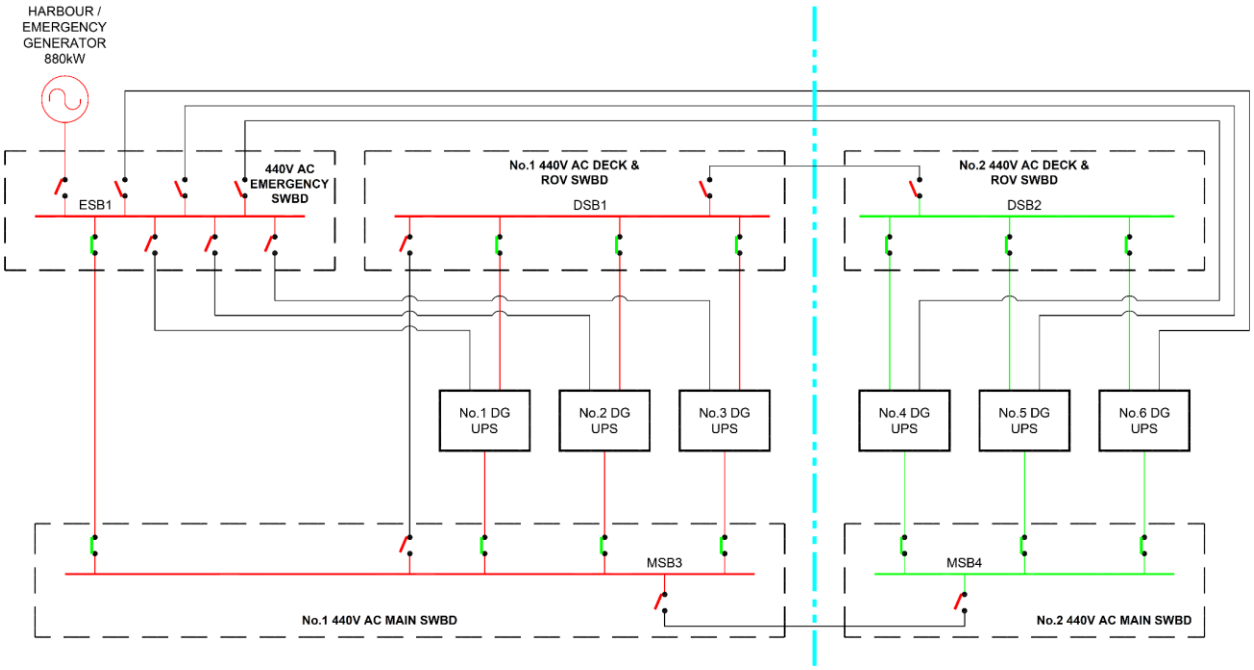

Isolation of these power supplies is not prohibited by the requirements for dead ship recovery.

Example 2 – Unwanted cross connections potentially introduced by the classification society

Overview

The vessel is a DP Class 2 Multipurpose Offshore Construction and ROV Support Vessel that was under construction in China. The vessel has four diesel generators and six thrusters. It has a DP 'Enhanced' class notation and is designed to operate in DP modes with open or closed bus ties.

Description

The 'Enhanced' notation requires that each diesel generator has autonomous control power. For the diesel generator main switchboard sections, this was arranged with individual UPS units.

Each UPS unit is supplied from the main switchboard bus section within the same redundant group as the diesel generator. An alternative power supply is arranged from the emergency switchboard via a manual changeover switch.

The principle arrangements are shown in Figure 6.

Figure 6

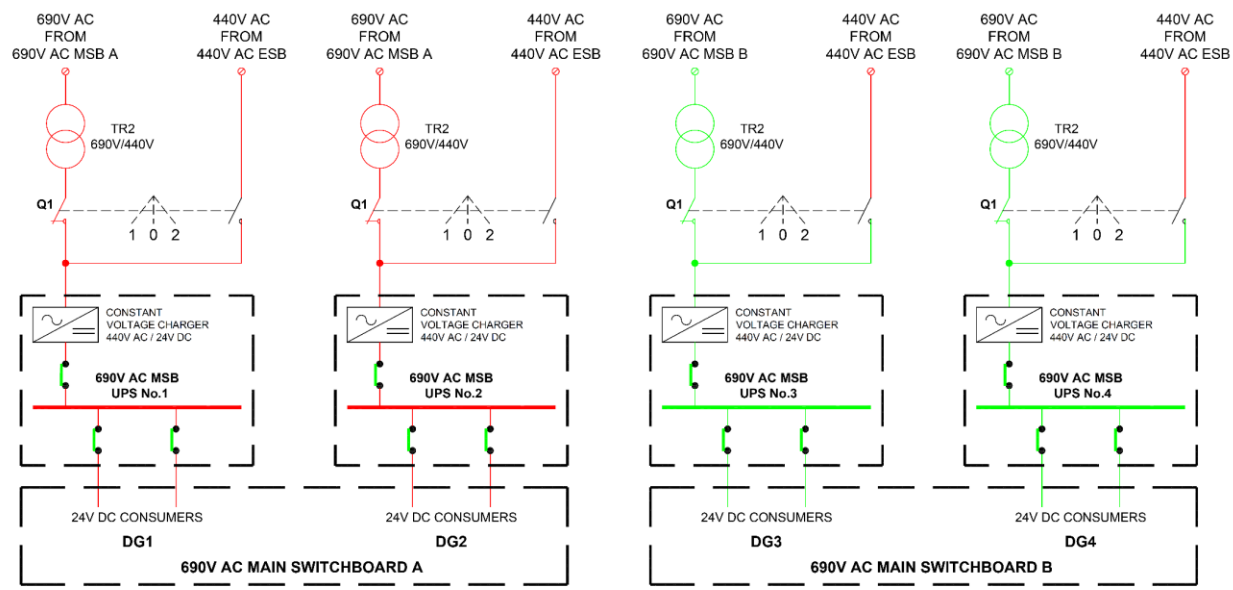

These arrangements were acceptable for the DP FMEA provider and followed the philosophies of segregation, independence and autonomy in accordance with the MTS DP Vessel Design Philosophy Guidelines, applicable TECHOPs and the classification societies rules for DP systems, provided that the switches where selected to the main switchboard power (position 1).

However, the power supply arrangements were reviewed by the classification society and it was determined that while the number of UPS units exceeded the minimum class requirements, the power supply arrangement did not meet the following rule requirement;

An independent control power supply system shall be arranged for each of the switchboard sections and be arranged with change over possibilities.

While it initially seemed that the comment was not relevant, a number of technical discussions highlighted that the definition of 'independent control power supply system' was referenced in another part of the classification society rules and is as follows;

When independent power supplies are required, these supplies shall be from separate sections of the main switchboard or from distribution boards supplied from separate sections of the main switchboard.

This prompted the vessel's electrical designers to change the design of the power supply arrangements, so that MSB A UPS No.2, for Diesel Generator No.2 was supplied from MSB B, and MSB B UPS No.3, for Diesel Generator No.3, was supplied from MSB A. The arrangement is shown in Figure 7.

Figure 7

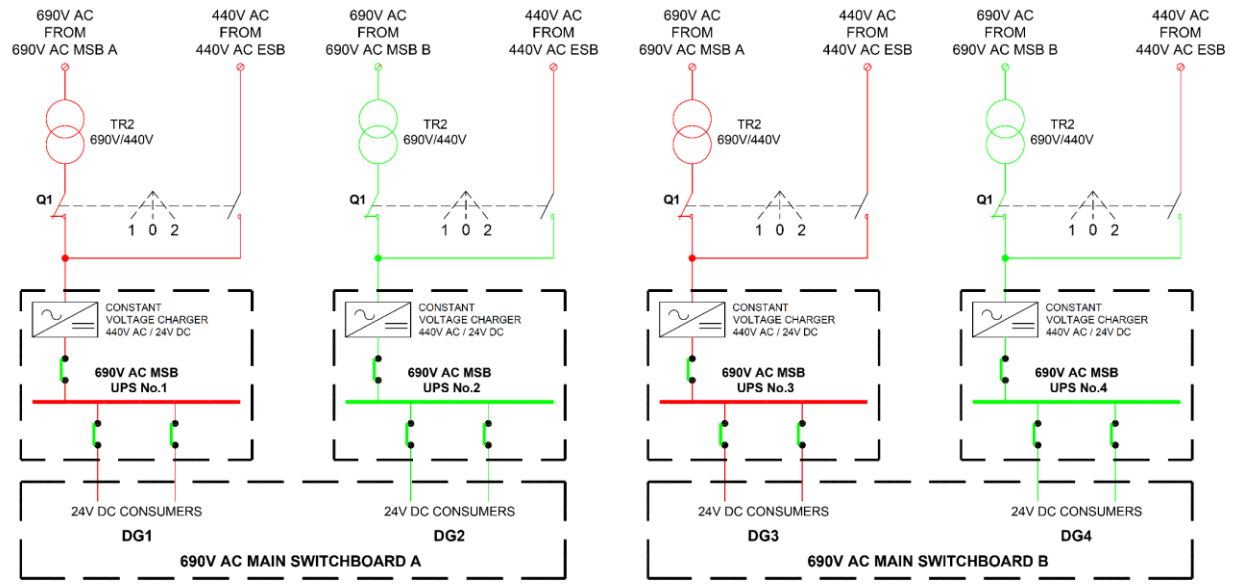

Following an assessment by the DP FMEA service provider, the arrangement was deemed not to follow the philosophies of independence and autonomy in accordance with the MTS DP Vessel Design Philosophy Guidelines and applicable TECHOPs.

Furthermore, the arrangement was also not in accordance with the applicable class rules for DP systems which required control system power supplies from within the same redundant group and the rules for the DP 'Enhanced' notation which required autonomy within each redundant group.

The arrangement was deemed not to follow the philosophies of Fault Tolerance, Fault Resistance and Fault Ride Through. The assessment by the DP FMEA provider highlighted the conflicts and showed that the design introduced failure modes, including hidden failures, that had the potential to exceed the WCFDI.

The assessment was presented to the classification society through the vessel's electrical designers and the comment was closed without an explanation. The original system design was upheld and the unwanted cross connections were avoided.

The original design was such that, in the operational configuration, there were no cross connections between the UPS power supply arrangements which followed the vessel's redundancy concept. The rule requirement within the main class rules proved to be conflicting and inappropriate to this type of vessel design. However, there are numerous vessel designs which have similar arrangements that do not follow the vessel's redundancy concept. Such designs could be influenced with the intention of meeting the main class rule requirements.

Example 3 – A cross-connection that could not be removed

Overview

The vessel is a DP Class 2 High Speed Catamaran Crew Boat. This vessel was designed for DP operations during personnel transfer to / from offshore installations using a motion compensated gangway.

The redundancy concept is based on four redundant groups.

Two of the redundant groups each comprise two main engines and a waterjet type propulsion thruster. The equipment within each redundant group is autonomous.

The other two redundant groups each comprise one diesel generator, one main switchboard section and one bow azimuth thruster. The principle arrangement of the main switchboard is shown in Figure 8.

Figure 8

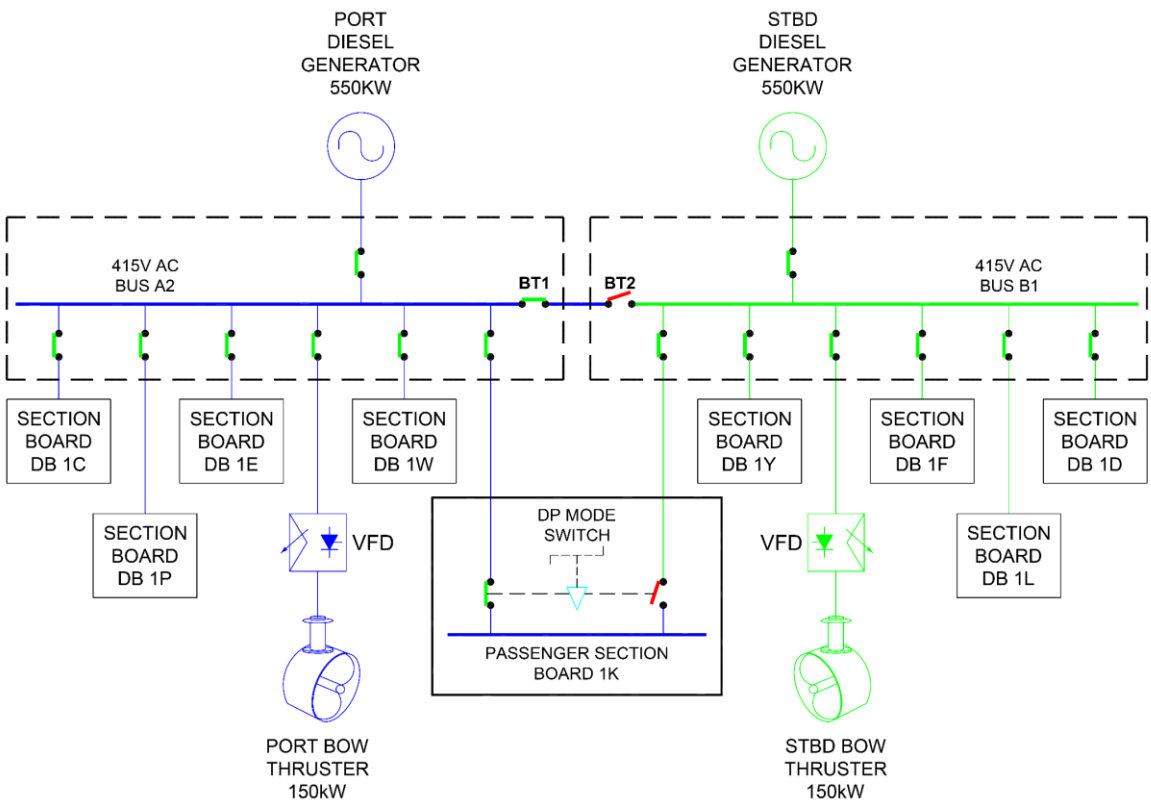

Technical Arrangement of the Earthing System

The design of the power system incorporated a TN-S neutral earthing system with a single neutral-earth connection.

The classification society rules state the following requirements for the earth connection which are relevant to the vessel;

If the system neutral is connected to earth, means of disconnection shall be fitted so that the system earthing may be disconnected for maintenance or insulation resistance measurement. Such means shall be for manual operation only.

In any four wire distribution system the system neutral shall be connected to earth at all times without the use of contactors.

The neutral earth connection applicable to the design is connected using a MEN Link (manual means of disconnection), located at Bus A of the main switchboard.

The neutral / earth is common to both redundant power distribution systems and three pole circuit breakers were provided for the diesel generators and bus tie breakers.

The common neutral was highlighted to the designers as a cross connection and a potential common point of failure which could potentially have an effect on both redundant power distribution systems in the event of a failure such as a short circuit between one phase and neutral.

There was a concern that this had the potential to exceed the WCFDI. It was therefore suggested that the neutral conductor be separated into two sections during DP operations, possibly by the installation of four pole bus tie circuit breakers. The classification society rules did allow for installation of four-pole circuit breakers under the following rule reference;

No fuse, switch or breaker shall be inserted in earthing connections or conductors. Earthed neutrals may be disconnected provided the circuit is disconnected at the same time by means of multipole switch or breaker.

Description

The switchboard designers responded by stating that if a short circuit occurred between one phase and neutral / earth the generator circuit breaker at the affected switchboard section would trip and isolate the fault. The designer stated that the fault could not transfer to the other switchboard section without a live return.

The designers included the following explanation in response to the suggestion of four pole bus tie circuit breakers;

- The installation of 4 pole bus tie breakers would mean that Bus B of the main switchboard would not have a neutral-earth connection which is not allowed under requirements of the classification society.
- The design requirement was to synchronise the generators and start the thrusters before opening the bus tie. Therefore, the installation of a MEN Link at each source was also not an option.

Other system designs that had previously been assessed with a completely separated system neutral were compared with this type of design, with the fundamental differences being as follows;

- The vessel was built under the rules of a different classification society
- Four-pole circuit breakers were fitted in the generator panels and the bus tie panel
- Earth fault detection was provided at each bus section
- One of the earth connections was automatically disconnected when the bus tie breaker was closed.

Various discussions took place and it was clear that separation of the neutral would require extensive and expensive modifications to the design of the system, as the design concept of the system was based on one neutral earth connection only.

The designer requested some form of published data showing that fault propagation between redundant groups had previously occurred on this type of arrangement. There was limited information or case studies available for this type of design and the available industry guidance is generally associated with insulated neutral systems.

There were some limited case studies that were available on the internet which showed that short circuit faults within common neutral-earth arrangements had caused inadvertent tripping of circuit breakers that should have been unaffected by the fault. However, these case studies were specifically related to systems with ground fault detection systems utilizing current transformers.

A ground fault detection system (utilizing current transformers) is not installed on this vessel as it is not required by the classification society for this type of arrangement. The earth fault protection is therefore provided by the overcurrent and short circuit protection of the circuit breakers, which is acceptable within the classification society rules.

In the absence of any published data or case studies which were based on the same arrangement, the designer was of the opinion that the classification society should assess the findings of the DP FMEA and

any further design changes or testing requirements should be based on the requirements of the classification society. The first revision of the DP FMEA therefore concluded that the overall effects of a short circuit between the live and the neutral / earth was not known and could not be concluded.

The DP FMEA was reviewed by the classification society, who issued a comment to state that the scenario of such a failure could be concluded by;

- Live testing during DP FMEA proving trials, or
- Simulative analysis

The designer elected to conduct a live short circuit test between one phase and neutral / earth during DP FMEA proving trials, the results of which were found to be satisfactory. The basis of the designer electing to conduct the test as opposed to a detailed analysis, were the high costs involved in conducting such an analysis. The designer also advised verbally that they were not fully confident that an analysis would prove their own theory that only equipment within this redundant group would be affected.

The common neutral-earth arrangement on this vessel is an uncommon arrangement within the power systems of vessels with DP systems. As such, there is no published data or case studies showing the potential limitations or potential weaknesses with this type of design.

Example 4 – Cross connections within emergency systems

Overview

The vessel is a DP Class 2 Platform Supply Vessel that was approaching 10 years old. The vessel management decided to renew the vessel's FMEA documentation in time for the 5-year class survey.

The vessel management within the company are taking a proactive approach to periodical review and renewal of the FMEA documentation for their vessels and where possible, remove any fault propagation paths between redundant groups throughout the fleet.

Where cross-connections are in place on their existing vessels, barriers have been put in place such as the isolation of cross-connected power supplies, verification by DP operational checklists and configurations for CAM operations. This is allowing time for the appropriate processes to be followed, to engineer out the cross connections when the appropriate opportunities arise. The process of engineering out the cross connections includes consultation with the FMEA provider, consultation with the classification society and management of change.

The subject vessel has an Emergency Control Panel at the Fire Control Station which provides the interface for the remote operation of fire pumps and group emergency stops.

A cross-connection was identified in the power supply circuit to the control panel.

Description

One of the 24V DC distribution systems is designated as the 'emergency' system, because the battery charger is supplied with power from the emergency switchboard. The other 24V DC distribution system is designated as the 'main' system, because the battery charger is supplied from one of the main switchboards.

The internal power circuits of the emergency control panel supply power to the group emergency stop circuits and also the control circuits to the main and emergency fire pumps, to facilitate remote start and stop of the pumps.

The DP FMEA document established that there would be no effects on the group emergency stop circuits following failure of the internal 24V DC circuit and that following failure, the fire pumps could be started locally.

The DP FMEA document concluded that the cross connected power supply introduced a fault propagation path between the two 24V DC distribution systems that were supplying critical DP equipment in both of the vessel's redundant groups. A hidden failure at one of the isolating diodes in the dual power supply arrangement at the panel, followed by a short circuit, can result in voltage dips that affect equipment connected to both redundant groups. The common negative also introduced the potential for other fault propagation paths between the redundant systems, such as earth faults.

The DP FMEA document therefore proposed that the cross-connection should be engineered out of the design permanently by removing the designated main power supply, as shown in Figure 9.

Figure 9

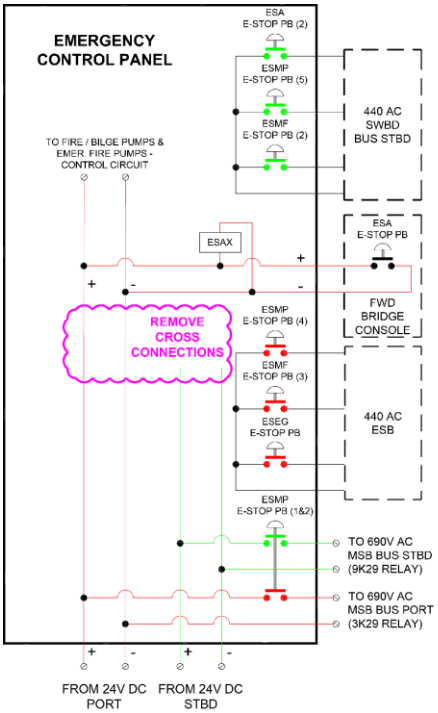

The DP FMEA document was submitted to the classification society for approval and the suggested modification to the emergency control panel was deemed not acceptable because failure of the entire main or emergency distribution system (including the emergency 24V DC distribution system) should not have an effect on the other system. The following rule requirements were quoted;

Services required for normal operation of the vessel shall be operable with the emergency electrical power generation and distribution system being unavailable, unless such services are permitted to be powered by emergency electrical power supply only.

All consumers that support functions required to be available in normal operation, shall be supplied from distribution systems independent of the emergency electrical power supply system. Exemptions are made for one of redundant consumers required for dead ship recovery.

All consumers required to be available in emergency operation shall be supplied from distribution systems independent of the main electric power supply system.

Following discussions between the vessel's management and the classification society, it was determined that removal of the cross connection would be in contravention of the main class rules and SOLAS. They concluded that the installation of DC / DC converters providing galvanic isolation in each power supply would be an appropriate solution to incorporate fault tolerance without the need to modify the original, classed approved power supply arrangement.

The DP design philosophy of the vessel comprises two redundant groups; the port redundant group and the starboard redundant group. The port 220V AC main switchboard belongs to the port redundant group and

the starboard 220V AC main switchboard belongs to the starboard redundant group. The single emergency switchboard belongs to the port redundant group.

Therefore, as is the case with most DP vessels, a main power supply and an emergency power supply are available from within the same redundant group.

A more appropriate solution was to supply the emergency control panel with main power originating from the port 220V AC main switchboard and emergency power originating from the existing 24V DC distribution system. Both main and emergency power supplies would then belong to the same redundant group, therefore maintaining segregation and independence without a reliance on fault tolerance.

SUMMARY

Example of a basic misinterpretation of DP class rules, by class

The example provided is a basic one that illustrates; in some cases, persons allocated with responsibilities that are directly related to DP vessel safety require further training or self-development and assessment. Experience suggests that this is an industry wide problem and is not only applicable to some classification society representatives but also some who represent vessel operators, charterers and companies providing DP services.

Within the DP Community, the word 'Competency' has traditionally been associated with DP operators. However, the delivery of predictable incident free DP operations is not dependent on DPO competency alone. Predictable and desired outcomes are influenced by a multitude of stakeholders including those within classification societies, DP vessel design companies and DP service providers. At the time of writing, the MTS DP Committee have recently published a draft of document: TECHOP_ODP_16_(P) – 'Competency Elements for DP Professionals – DP SMEs / DP FMEA Practitioners'. The ultimate objectives of the TECHOP are as follows;

- Competency development.
- Encourage companies to develop / enhance their own competency framework.
- Uniform and consistent standards for DP Subject Matter Experts and FMEA practitioners.
- Leveraging platform for standardisation.

There is an expectation that Companies will adapt the methodologies for their own internal assessment programmes. Standardisation can be achieved by doing so, when Companies structure their assessment programmes to be transparent and auditable.

Example 1 – Cross-connections necessitated by SOLAS and class rules

This example shows how cross connections are introduced into the design of electrical power systems due to mandatory legislation. However, it also shows how effective barriers can be implemented to isolate the potential fault propagation paths during DP operations.

Example 2 – Unwanted cross connections potentially introduced by the classification society

This example shows how cross connections can potentially be included in the design of DP vessels to comply with the requirements of main class rules, or an interpretation of the rules.

The arrangement that was proposed to comply with main class rules would not have been compliant with the rules for the DP class notations to be assigned to the vessel, in this case. However, in some cases DP vessels built under different class notations with different classification societies may have to comply with

aspects of main class rules or interpretations of the rules, which introduce fault propagation paths into the design.

Whilst this example also shows how a proactive rational assessment can support the application for reason, this was an unnecessary and time-consuming process that should have been avoided.

Example 3 – A cross-connection that could not be removed

The common neutral-earth arrangement on this vessel is an uncommon arrangement within the power systems of vessels with DP systems and the common neutral that was viewed as a cross connection and potential fault propagation path could be a unique arrangement on DP vessels.

There was no published data or case studies showing the potential limitations or potential weaknesses with this type of design. Any proposed modifications, such as the installation of 4-pole circuit breakers, to mitigate the unknown effects that could potentially exist within a system would not have been allowed by the classification society.

The classification society was essentially the arbitrator and provided advice on how the fault tolerance of the arrangement could be concluded. While the test proved to be successful, a detailed analysis alongside this would have provided more useful data to verify that this type of system was fully independent in terms of fault tolerance.

Example 4 – Cross connections within emergency systems

This example illustrates a proactive approach to raising standards and engineering out unnecessary cross connections on vessels in service, by one company who operate many DP vessels. It demonstrates that the engineering out of cross connections should be a process which involves FMEA review or renewal, management of change and engagement with the classification society.

In previous years, many technical and operational personnel within vessel operating companies have, on occasion, been reluctant to implement barriers and / or remove fault propagation paths between redundant systems following DP vessel assurance or pre-hire assessment.

Experience in more recent years suggests that operating companies with strong technical and operational management, have an increased awareness of the risks associated with cross connected power supplies and cross connections in general. This is likely attributable to their awareness of the applicable TECHOPs along with attendance at the MTS sponsored workshops that have been held throughout the world.

Discussion Points

There are often challenges with the implementation of the MTS DP Vessel Design Philosophy Guidelines and the supplementary TECHOPs (D), during the FMEA process for a DP vessel. This is not solely due to competence or lack of awareness.

Classification society rules for vessels with Dynamic Positioning systems are additional to the main classification society rules for ships. Main class rules for modern vessels with multiple class notations are extensive and even the basic requirements intended to improve reliability and safety will often introduce fault propagation paths between redundant groups on DP vessels. The most obvious examples are emergency power supplies for main power generation / propulsion systems, steering systems, safety systems and navigation systems, which originate from SOLAS and the IMO. Some of these requirements are intended for non-redundant systems.

When the introduction of cross connected power supplies between redundant groups seems unavoidable, there can be ways to avoid them during the DP vessel design process.

For example; emergency power supplies to propulsion thruster steering systems have been successfully removed with exemptions from class and flag state during the design of DP Class 3 vessels. This was based on the redundancy provided in the fundamental design of the DP Class 3 vessel. Such exemptions have not been granted on DP Class 2 vessels and effective permanent barriers have been implemented. Such barriers have been designed to inhibit the automatic changeover of the emergency power supply to the steering system of a propulsion thruster belonging to a separate redundant group. The inhibiting function is automatically enabled to disable the automatic changeover when the DP mode is selected and the circuit is arranged with hidden failure monitoring.

Compliance with the main classification society rules is often the primary focus for designers of electrical power distribution systems. An extract from a classification society's rule requirement for navigation system power supply arrangements is shown below.

The power supplies to the distribution boards shall be arranged with automatic changeover facilities between the two sources. Failure of one of the power supplies to the distribution board(s) shall initiate an alarm (audible and visual signal) in wheel house (CAM-HMI).

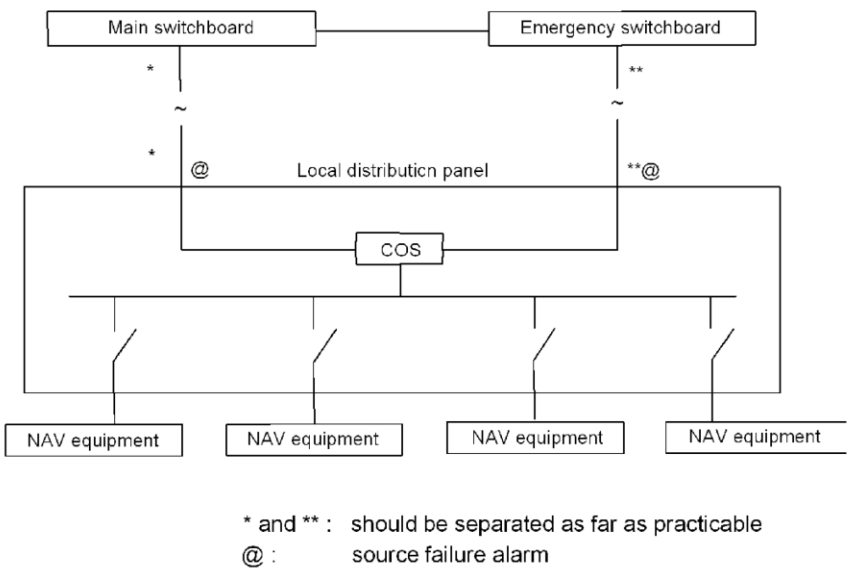

Such requirements may be seen to promote cross connected power supplies by way of automatic power supply changeover. However, for a DP Class 2 or 3 vessel, the same design can incorporate the main switchboard within the same redundant group as the emergency switchboard, provided that the power cables to the navigation distribution panel are separated as far as practicable.

Whilst significant improvements have been made to the classification society rules for vessels with DP systems in recent years, only some classification societies have rules which specifically address fault propagation paths created by;

- supplying equipment and control systems with power from outside of the same redundant group,
- automatic power supply changeovers between redundant groups,
- dual feeding of equipment such as thrusters,
- network storm
- and co-location of equipment supplied from redundant power distribution systems in DP Class 3 vessel designs.

IMO Guidelines for Vessels and Units with Dynamic Positioning (DP) Systems - MSC.1/Circ.1580, published in June 2017 includes an important statement in this regard which is as follows;

For equipment classes 2 and 3, connections between otherwise redundant and separated systems should be kept to a minimum and made to fail to the safest condition. Failure in one system should in no case be transferred to the other redundant system.

At the time of writing this paper, there are classification society rules for vessels with DP systems which include the important statement; “The transfer of failures between redundant subsystems is to be prevented by separation of the redundant systems”, under the requirements for Redundancy Design. However, this

philosophy is not disseminated to other specific sections of the same rules that specify requirements for Power Systems and Control Systems. The statement has been included for more than five years but many vessels that were built to these rules have subsystems with fault propagation paths between redundant systems, that have limited or inadequate protective functions. This is perhaps due to a lack of awareness with regard to fault propagation potential and a legacy belief that cross-connected power supplies improve reliability and provide added redundancy. In some cases, it can also be due to other influences such as the requirements of SOLAS and main class rules, as already illustrated.

There are also classification society rules for vessels with DP systems which do address requirements for most of the above bulleted points in detail. However, where these rules state that control systems and equipment should have power supplies from within the redundancy group they are serving, allowance is made for additional power supplies from other redundant groups; *In case power supply is arranged from more than one redundancy group special attention must be paid to the potential risk of propagation of failure modes due to e.g. lack of discrimination or due to under/overvoltage affecting more than one redundancy group*.

Where cross connections exist, analysis and in some cases, testing is required to prove the attributes of Fault Tolerance, Fault Resistance and Fault Ride Through.

Most, if not all classification societies do not specifically address network storm testing for DP system networks in their rules. While some classification societies have more stringent separation requirements than others, the requirements for validation and verification are unclear.

Conclusion

There are often challenges with implementation of the MTS DP Design Philosophy Guidelines and design TECHOPs, along with the fundamental principles of class rules for DP Class 2 and DP Class 3 vessels. These challenges can only be overcome with processes that address the following;

- Competence.
- Conflicts between class rules issued by different classification societies.
- Conflicts between main class rules and additional rules for vessels with dynamic positioning systems.
- Conflicts between class rules and the fundamental principles of DP redundancy, provided within the MTS DP Vessel Design Philosophy Guidelines.

There is an increasing awareness of the importance of the need for additional focus on competence beyond DPOs. The OCIMF Dynamic Positioning Assurance Framework which was published in 2016 draws attention to the need for competency of shore-based personnel and papers presented at DP conferences globally address competence of DP FMEA practitioners and personnel performing DP assurance activities. The recently published draft of document: TECHOP_ODP_16_(P) should provide Companies with the necessary tools to develop or enhance their own competency framework.

IMO MSC.1/Circ.1580 was published in June 2017 and states that for equipment classes 2 and 3, connections between otherwise redundant and separated systems should be kept to a minimum and made to fail to the safest condition. This was not specifically stated in IMO MSC Circular 645.
All classification societies should promote this philosophy and provide detailed rule requirements to address fault propagation paths created by commonality in equipment and system designs.
Processes should exist which allow for the implementation of the overall and fundamental philosophy. Classification societies should provide guidance for such processes which address conflicts between the requirements of the main class rules and those rules applicable to DP systems. Such guidance would be well placed within the class rules for vessels with dynamic positioning systems.

The philosophies of segregation, independence and autonomy promulgated through the MTS DP Vessel Design Philosophy Guidelines and applicable TECHOPs can be achieved through engagement with designers and classification societies. It is possible to remove most unnecessary fault propagation paths and implement effective barriers for others. Alternative design options should be always explored before accepting a cross connection into the design of a DP vessel.
Experience in recent years suggests that operating companies with strong technical management have an increased awareness of the risk associated with power supplies which are cross connected between

redundancy groups. This is likely attributable to their awareness of the applicable TECHOPs along with attendance at the MTS sponsored workshops that have been that have been held throughout the world. Such awareness has been shown by a willingness to remove unnecessary cross connections and implement barriers, on existing vessels in service and those under construction.

Acknowledgements

All information presented in this paper is based on the observations of the authors.

References

1. MTS DP Committee DP Vessel Design Philosophy Guidelines
2. TECHOP_ODP_11_(D)_Cross Connections
3. TECHOP_ODP_13_(D)_Control Power Supplies and Auto Changeovers
4. TECHOP_ODP_16_(P) – 'Competency Elements for DP Professionals – DP SMEs / DP FMEA Practitioners' – DRAFT
5. IMO Guidelines for Vessels and Units with Dynamic Positioning (DP) Systems - MSC.1/Circ.1580 - June 2017
6. IMO Guidelines for Vessels with Dynamic Positioning (DP) Systems - MSC/Circ.645 - June 1994
7. DNV Rules for Classification of Ships, Part 6, Chapter 3 – Navigation, manoeuvring and position keeping – January 2018
8. ABS Guide for Dynamic Positioning Systems – November 2013 (Updated May 2018)